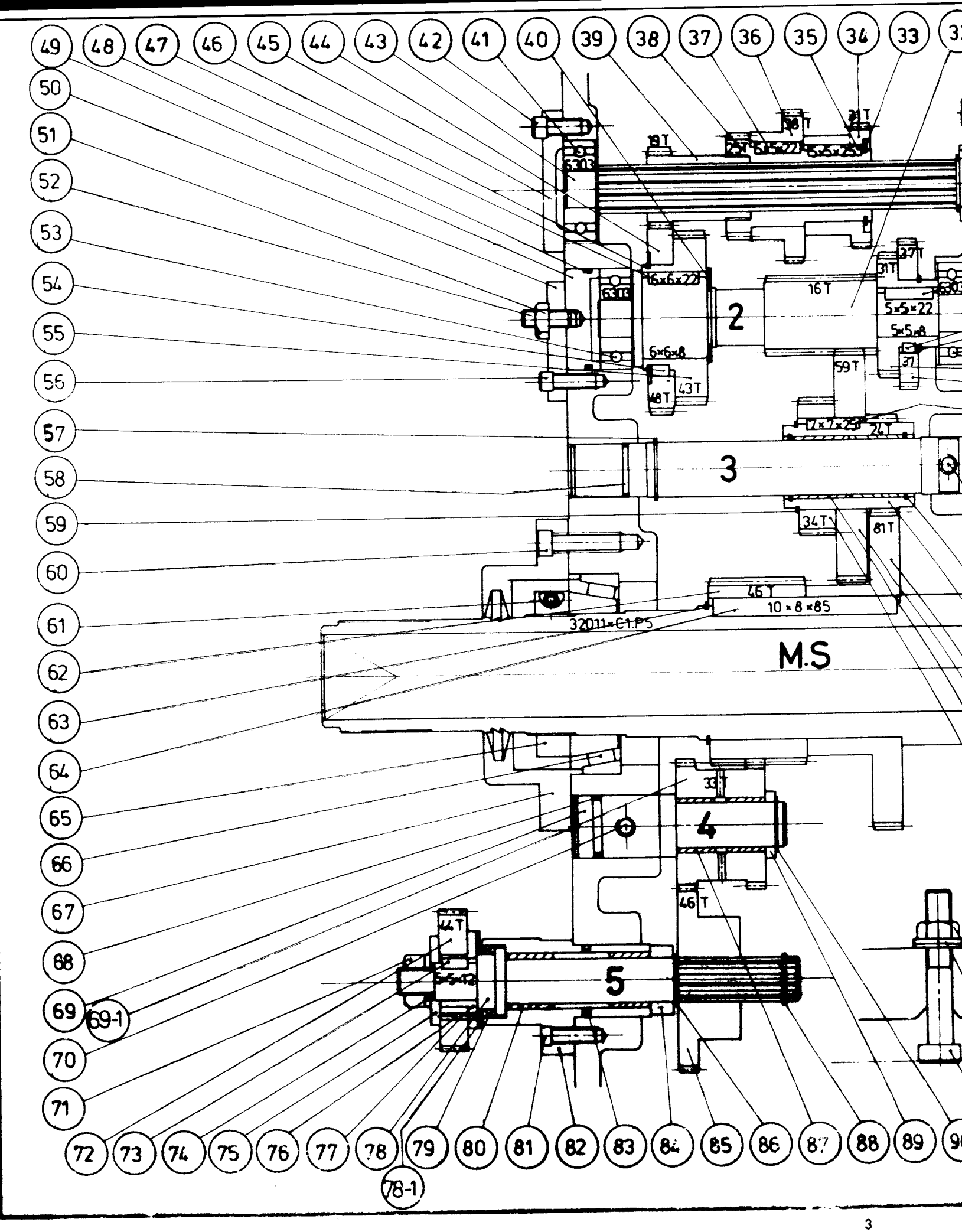
49
48
47
46
45
44
43
42
41
40
39
38
37
36
35
34
33
50
51
52
53
54
55
56
57
58
59
60
61
62
63
64
65
66
67
68
69
69-1
70
71
72
73
74
75
76
77
78
79
80
81
82
83
84
85
86
87
88
89
78-1
6303
19T
18T
21T
25T
6×5×22
5×6×25
16×6×22
6303
2
6×6×8
48T
43T
16T
37T
31T
5×5×22
5×5×8
37
59T
7×7×25
24T
3
34T
81T
46T
10×8×85
32011×C1.P5
M.S
33T
4
46T
44T
5×5×12
5

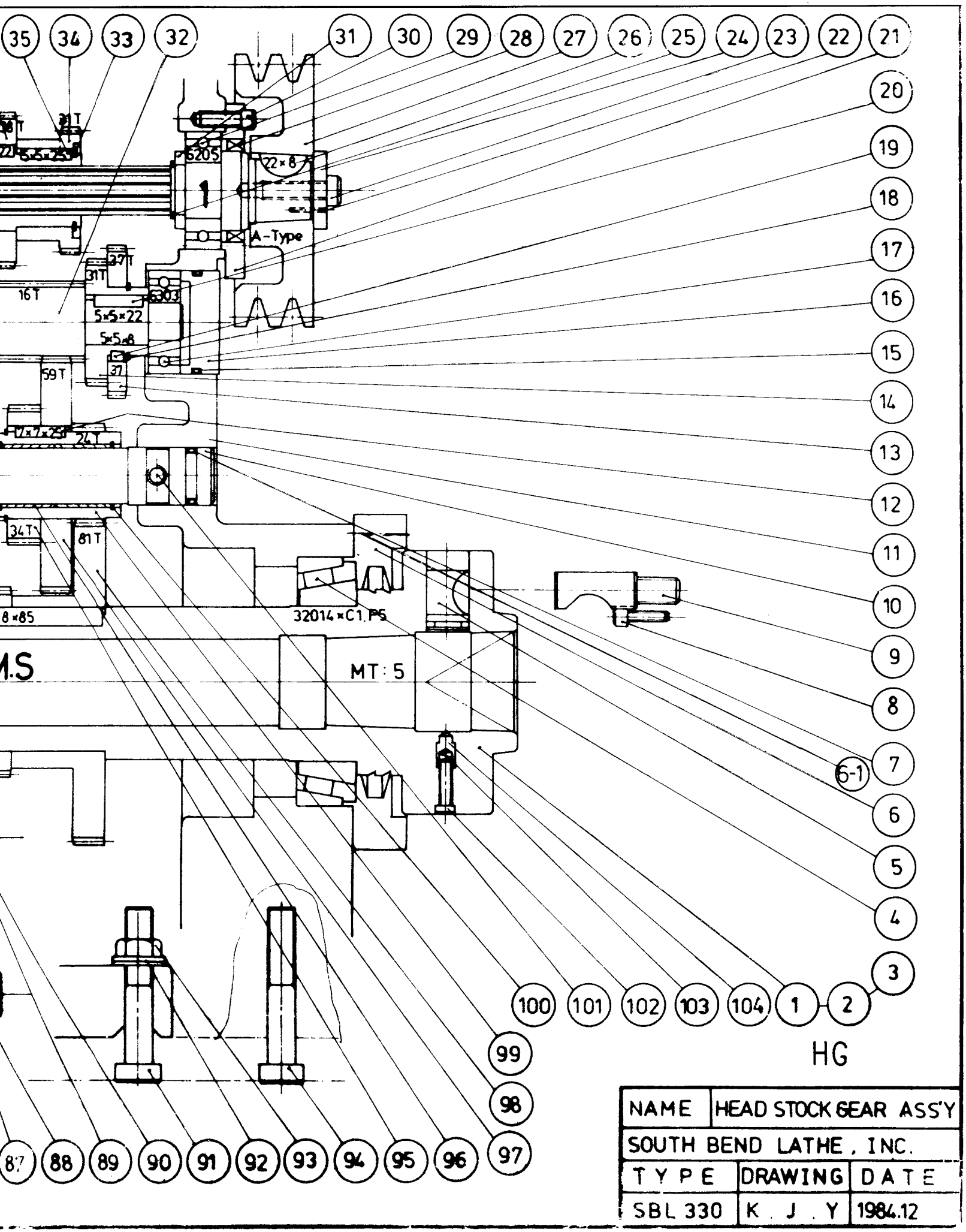

NAME	HEAD STOCK GEAR ASS'Y	
SOUTH BEND LATHE, INC.		
TYPE	DRAWING	DATE
SBL 330	K. J. Y	1984.12