NOTE: MOUNTING PLATE DESIGNED FOR BRIDGEPORT VARIABLE SPEED HEAD.

OTHER MILLING MACHINES MAY REQUIRE MODIFIED MOUNTING PLATE DESIGN.

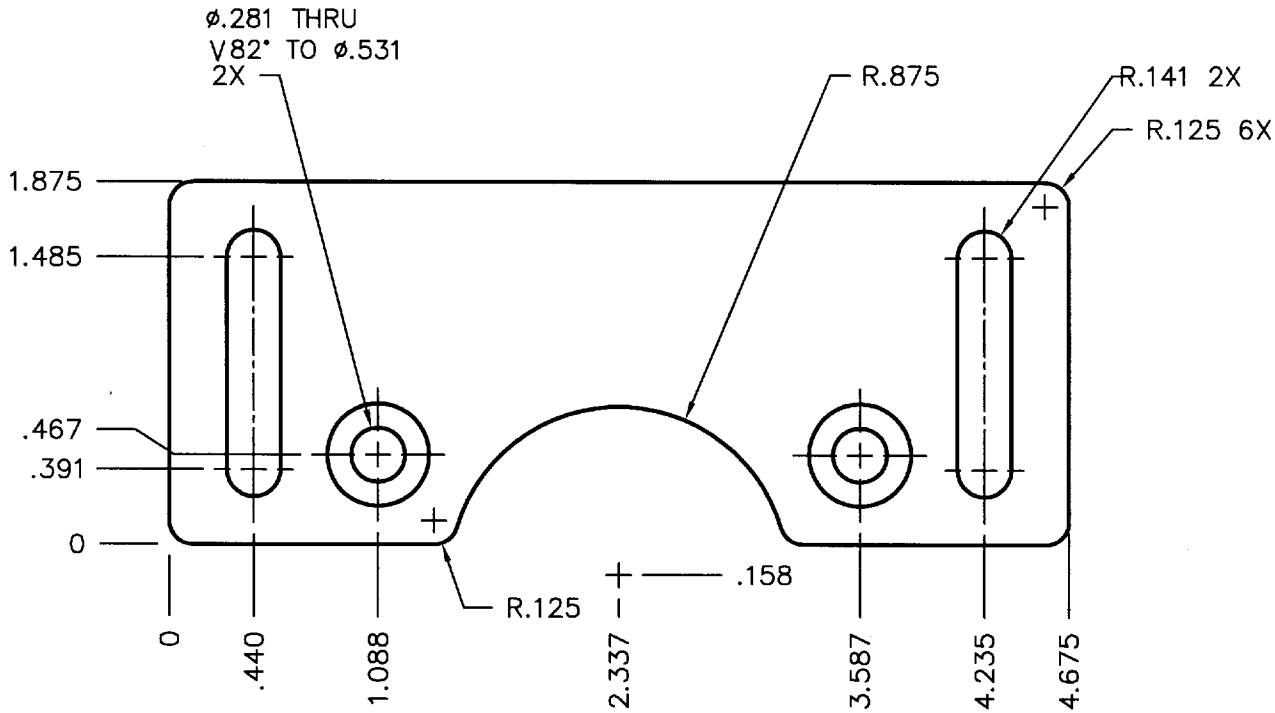

16 BASE MOUNTING PLATE
ALUMINUM
1 REQD.

MATERIAL .25 ALUMINUM
6061–T6 BAR OR PLATE

WWW.HOMESHOPACCESSORIES.COM

TITLE				DWG NO
BASE PLATE BRIDGEPORT				
REV. 1 JUNE 2006	SEE A	SCALE 1:1	DATE 2/2/07	SHEET 5 OF 7

Copywright © 2006 Home Shop Accessories Inc.