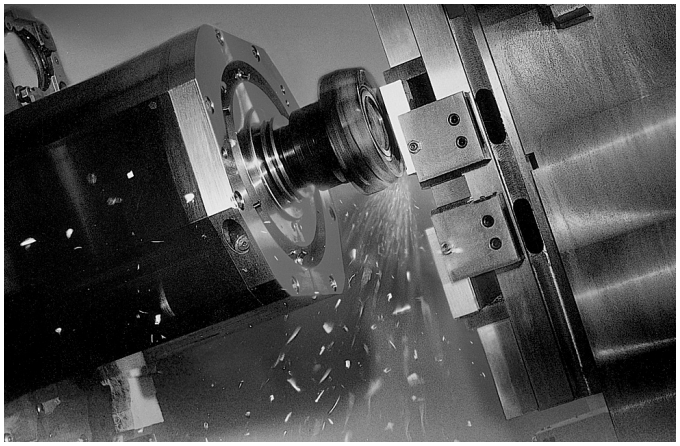

Chapter 18

Milling Machine Operations

LEARNING OBJECTIVES

After studying this chapter, students will be able to:

- Describe how milling machines operate.
- Set up and safely operate horizontal and vertical milling machines.
- Perform various cutting, drilling, and boring operations on a milling machine.
- Make the needed calculations and cut spur gears.
- Make the needed calculations and cut a bevel gear.
- Point out safety precautions that must be observed when operating a milling machine.

INSTRUCTIONAL MATERIALS

Text: pages 317–352
Test Your Knowledge Questions, pages 351–352
Workbook: pages 99–106
Instructor's Resource: pages 239–252
Guide for Lesson Planning
Research and Development Ideas
Reproducible Masters:
18-1 Mounting End Mills
18-2 Using the Edge Finder
18-3 Efficiency of Small Diameter Cutter
18-4 Straddle Milling
18-5 Types of Gears
18-6 Gear Nomenclature
18-7 Bevel Gear Nomenclature
18-8 Test Your Knowledge Questions
Color Transparencies (Binder/CD only)

GUIDE FOR LESSON PLANNING

Due to the amount of material covered, it would be advisable to divide this chapter into several segments. Although it has been divided into five parts here, each classroom situation will dictate what division would work best.

While covering each segment of this chapter, continually emphasize the safety precautions that must be observed when operating milling machines.

Part I—Vertical Milling Machine

Have the class read and study pages 317–328, paying special attention to the illustrations. Review the assignment using Reproducible Masters 18-1 and 18-2 as overhead transparencies and/or handouts. Discuss or demonstrate the following:

- Parts of the vertical milling machine.
- Cutters for vertical milling machines.
- Vertical milling machine operation.
- Methods employed to mount cutters. Use Reproducible Master 18-1.
- Methods used to align a vise.
- Demonstrate how to align a vise with a dial indicator.
- Mounting work in a vise.
- Squaring stock with a vertical milling machine.

- Machining angular surfaces.
- Positioning a cutter to mill a keyway or slot.
- Demonstrate how to use a wiggler.
- Demonstrate how to use an edge finder. Use Reproducible Master 18-2.
- Boring on a vertical milling machine.
- Milling machine care.

Part II—Horizontal Milling Machine Operations

Have the class read and study pages 328–339 paying particular attention to the illustrations. Review the assignment using Reproducible Masters 18-3 and 18-4 as overhead transparencies and/or handouts. Discuss or demonstrate the following:

- Milling flat surfaces.
- Why the smallest diameter cutter that will do the job should be used.
- How to position a cutter using a paper strip.
- Face milling.
- Side milling.
- Straddle and gang milling.
- How to position a side cutter to mill a slot in flat stock.
- How to position a side cutter to mill a slot or keyway in round stock.
- Slitting and slotting operations.
- Drilling and boring on a horizontal milling machine.
- How to align an existing hole for boring.
- Care and cleaning of a horizontal milling machine.

Part III—Cutting a Spur Gear

A selection of gears, dividing head and gear cutters should be available for examination.

Have students read and study pages 340–346, paying particular attention to the illustrations. Review the assignment using Reproducible Masters 18-5 and 18-6 as overhead transparencies and/or handouts. Discuss or demonstrate the following:

- Gear nomenclature.
- How to determine the correct gear cutter.
- Calculating the information necessary to cut a gear.
- Preparing the dividing head to cut the required number of teeth.
- How to center the gear cutter on the work.
- Cutting the gear.
- How gear teeth measurement is checked.

Part IV—Cutting a Bevel Gear

An assortment of bevel and miter gears should be available for examination.

Copy and distribute Reproducible Master 18-7. Explain how cutting a bevel gear is a much more complex operation than cutting a spur gear. Before studying the segment on how to cut a bevel gear, allow students/trainees to examine and compare bevel and spur gears. Hold an open discussion emphasizing the differences between the two.

Have students read and study pages 346–349, paying particular attention to the illustrations. Review the assignment and discuss the complexity of cutting a bevel gear with accuracy.

Part V—Industrial Applications of Milling Machines

Using the illustrations on pages 350 and 351, point out the variety of milling machine types. Point out how the machine in Figure 18-98 is radically different.

Many companies are willing to provide educational materials in the form of press kits. Obtain as much information on new milling machines as possible. In addition to printed materials, request any available photographs, slides or videos. These materials are also available at annual trade shows.

Technical Terms

Review the terms introduced in the chapter. New terms can be assigned as a quiz, homework, or extra credit. The following list is also given at the beginning of the chapter.

addendum
bevel gear
circular pitch
dedendum
diametral pitch
gang milling
slitting
slotting
spur gear
straddle milling

Review Questions

Assign *Test Your Knowledge* questions. Copy and distribute Reproducible Master 18-8 or have students use the questions on pages 351–352 and write their answers on a separate sheet of paper.

Workbook Assignment

Assign Chapter 18 of the ***Machining Fundamentals Workbook.***

Research and Development

Discuss the following topics in class or have students complete projects on their own.

1. Prepare a video or slide presentation illustrating the safety precautions that must be followed when operating a vertical milling machine.
2. Demonstrate how to use a wiggler and edge finder.
3. Demonstrate how boring is done on a vertical milling machine.
4. Demonstrate how to center a cutter on round stock for milling a keyseat. Use the paper strip technique.
5. Overhaul and paint a milling machine in your training facility.
6. Demonstrate how to cut a spur gear.
7. Demonstrate how to machine helical gears.
8. Present a video on CNC milling machines. Lead the discussion on what was seen.
9. Develop a simple project to be made by an NC or CNC milling machine. Prepare the program to do the job.

TEST YOUR KNOWLEDGE ANSWERS, Pages 351–352

1. Any order: face, end.
2. two-flute
3. two-flute
4. inserted tooth
5. vernier
6. Any order: tilting the spindle head; setting the work at the specified angle in the vise; using the protractor head of the combination set to position the work.
7. edge finder, wiggler, or centering scope
8. dial indicator
9. Evaluate individually. Refer to Section 18.3.4.
10. a. Several cutters being used at same time to machine a job.
11. To prevent it from slipping during machining.
12. smallest
13. shortest
14. Evaluate individually. Refer to Section 18.5.1.
15. 0, 45, 18
16. A spur gear is a toothed wheel that has teeth that run straight across the face and are perpendicular to the sides. The teeth are shaped so contact between the mating gears is continually maintained while in operation.
17. A rack is a flat section of metal with teeth cut into it. The combination of a spur gear and a rack converts rotary motion into linear motion.
18. Evaluate individually.

WORKBOOK ANSWERS, Pages 99–106

1. Any order: milling, drilling, boring, reaming.
2. If not, a flat surface cannot be machined.
3. With a dial indicator and a special holder.
4. By wiping the vise jaws and base clean and inspecting for burrs and ticks.
5. Thin paper strips.
6. dial indicator
7. d. All of the above.
8. against
9. Evaluate individually. Refer to Section 18.4.
10. It is more efficient because it travels less distance while doing the same amount of work as a larger cutter.
11. toward
12. b. called shell mills
13. A machining technique where a pair of cutters are used to machine both sides of the work at the same time.
14. Gang milling employs mulitiple cutters to machine several surfaces in one pass.
15. climb
16. Forces the work down against the worktable.
17. In slotting, the cut is only made partway through the work.
18. are not
19. toward
20. eight

21. To change the angular direction of power between two shafts.
22. b. narrower at the small end than at the large end
23. d. All of the above.
24. Final inspection is made by running the mating gears and checking for quietness and shape of the tooth contact.
25. D_o = 5.100″
    D = 5.000″
    h_t = 0.1078″
    t_c = 0.0785″
    a = 0.050″
    Dividing head setup = 2/5 turn per tooth
    Hole series used on index plate = 18 holes in 45 hole series in index plate
    Gear cutter to be used = No. 2
26. D_o = 5.000″
    D = 4.500″
    h_t = 0.539″
    t_c = 0.392″
    a = 0.250″
    Dividing head setup = 5/18 turn per tooth
    Hole series used in index plate = 25 holes in 90 hole series in index plate
    Gear cutter to be used = No. 6
27. D_o = 1.750″
    D = 1.500″
    h_t = 0.2696″
    t_c = 0.196″
    a = 0.125″
    Dividing head setup = 5/12 turn per tooth
    Hole series used in index plate = 15 holes in 36 hole series in index plate
    Gear cutter = No. 8
28. D_o = 3.1667″
    D = 3.0000″
    h_t = 0.1798″
    t_c = 0.1309″
    a = 0.0833″
    Dividing head setup = 1 1/9 turns per tooth
    Hole series used in index plate = 9 holes in 81 hole series in index plate
    Gear cutter to be used = No. 4
29. D_o = 6.500″
    D = 6.000″
    h_t = 0.539″
    t_c = 0.393″
    a = 0.250″
    Dividing head setup = 5/24 turn per tooth
    Hole series used in index plate = 20 holes in 96 hole series in index plate
    Gear cutter to be used = No. 5
30. D_o = 19.333″
    D = 18.667″
    h_t = 0.719″
    t_c = 0.524″
    a = 0.333″
    Dividing head setup = 5/7 turn per tooth
    Hole series used in index plate = 45 holes in 63 hole series in index plate
    Gear cutter to be used = No. 2

Mounting End Mills

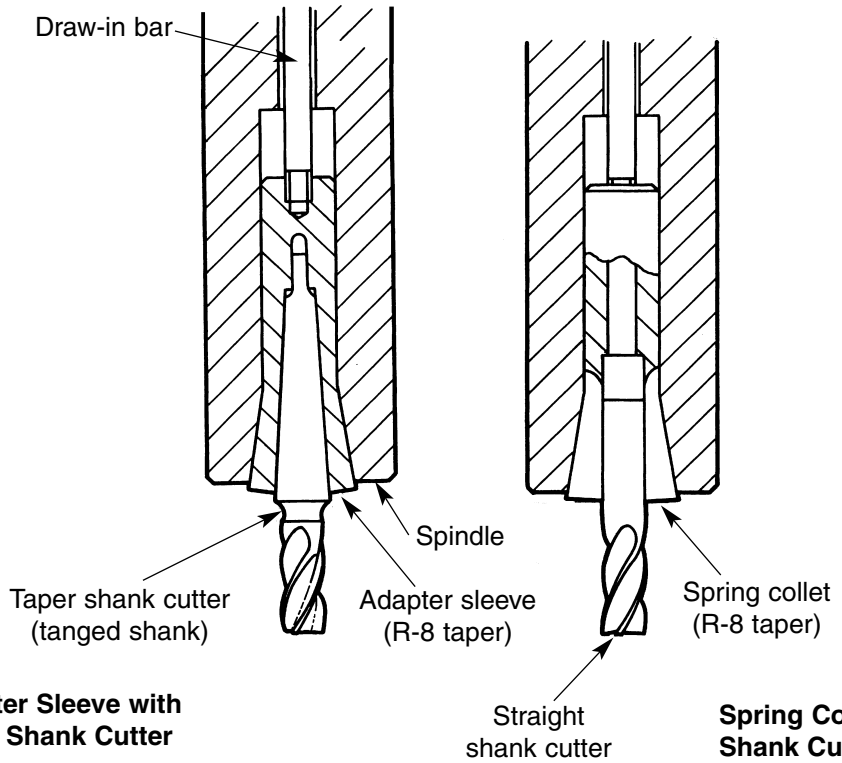

Adapter Sleeve with Taper Shank Cutter

Spring Collet with Straight Shank Cutter

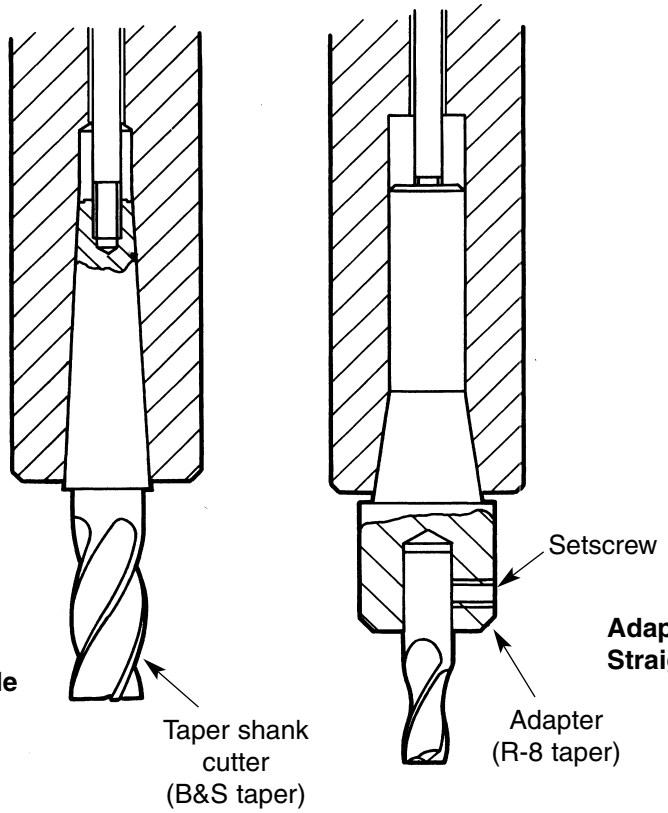

B&S Taper Mounted Directly in the Spindle

Adapter with Setscrew on Straight Shank Cutter

Using the Edge Finder

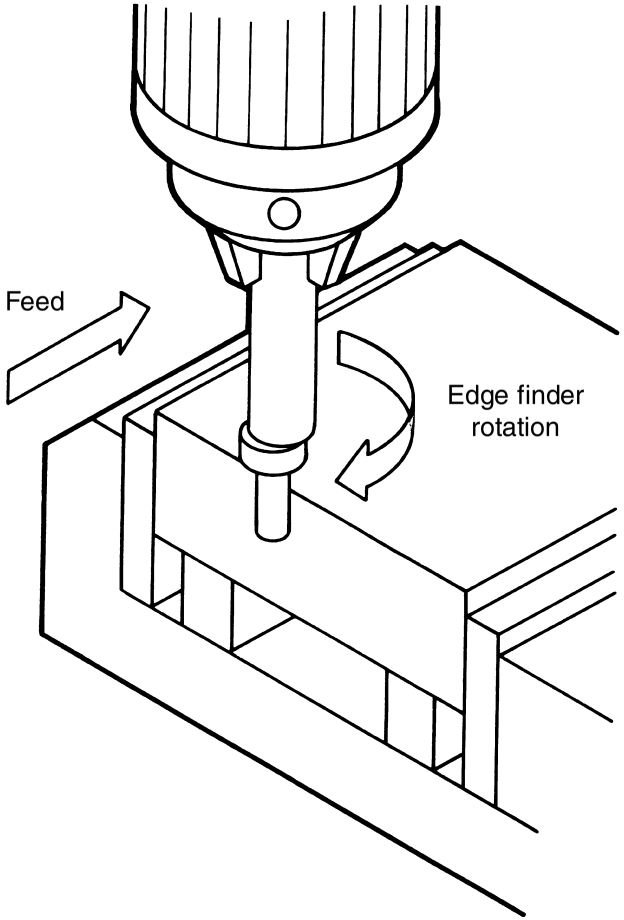

With spindle rotating at moderate speed, and with edge finder tip as shown, slowly feed tip of tool against work.

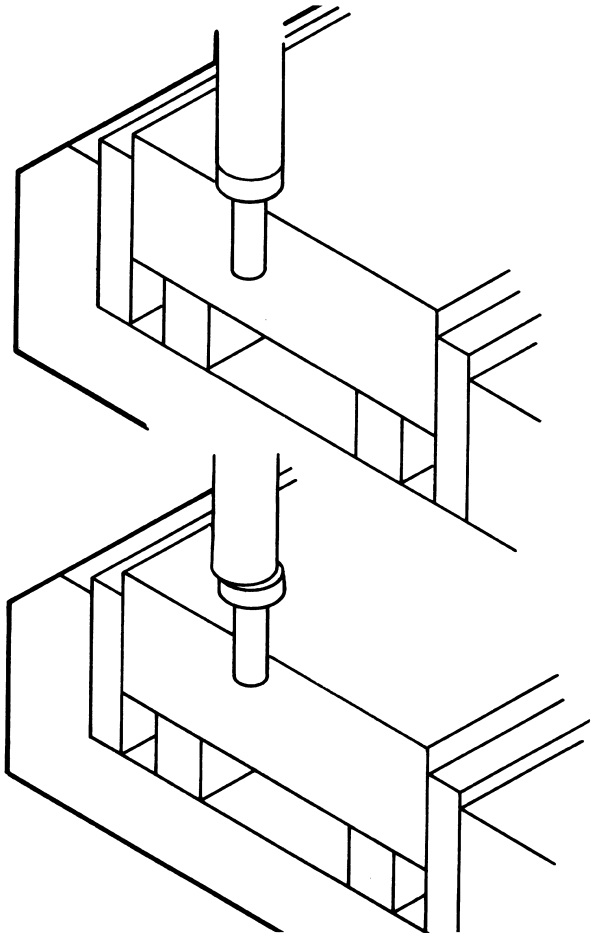

Edge finder tip will gradually become centered with its shank.

When the tip becomes exactly centered, it will abruptly jump sideways about 1/32″ (0.8mm). When this occurs, stop table movement immediately. Center of the spindle will be exactly one-half tip diameter away from edge of work. Set the micrometer dial to "0" and, with edge finder clear of work, move table longitudinally the required distance plus one-half the tip diameter. Follow the same procedure to get traverse measurement.

Efficiency of Small Diameter Cutter

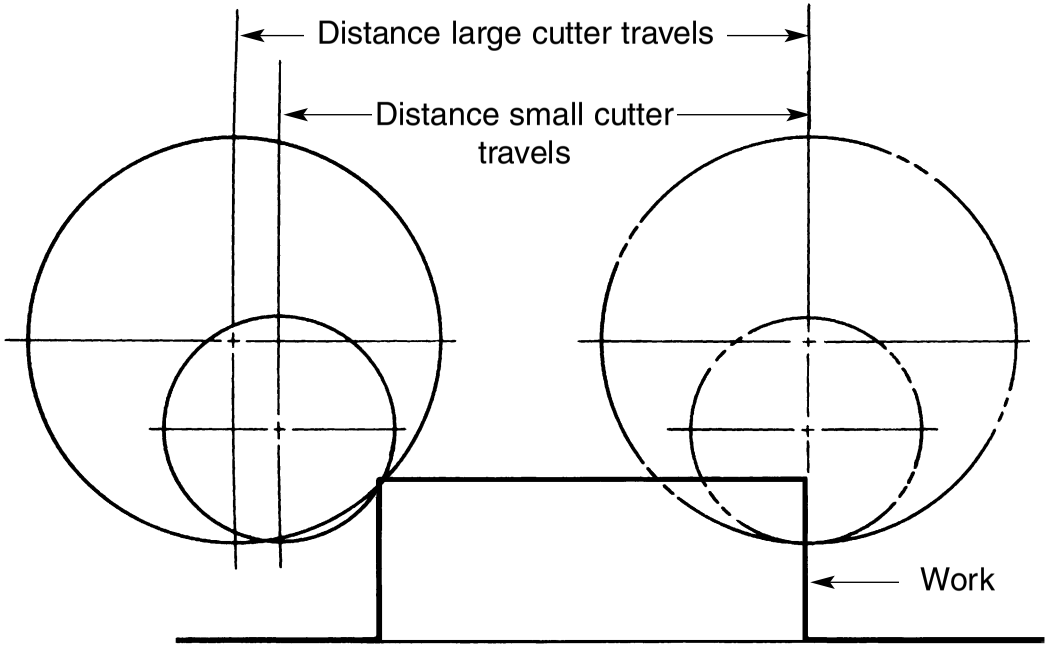

Straddle Milling

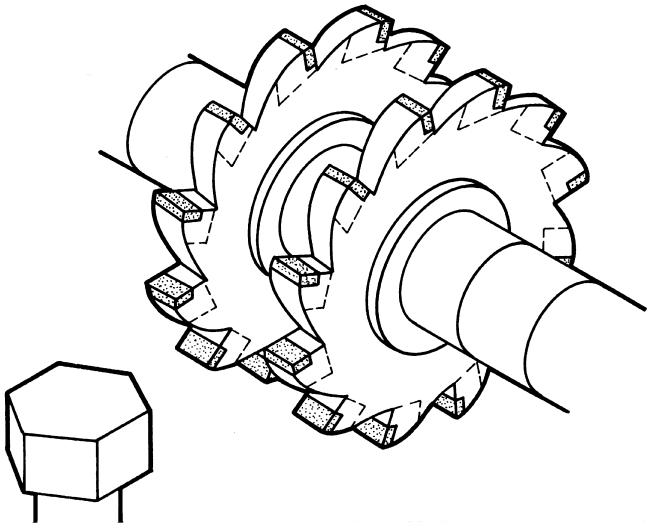

Using a Spacer Between Cutters

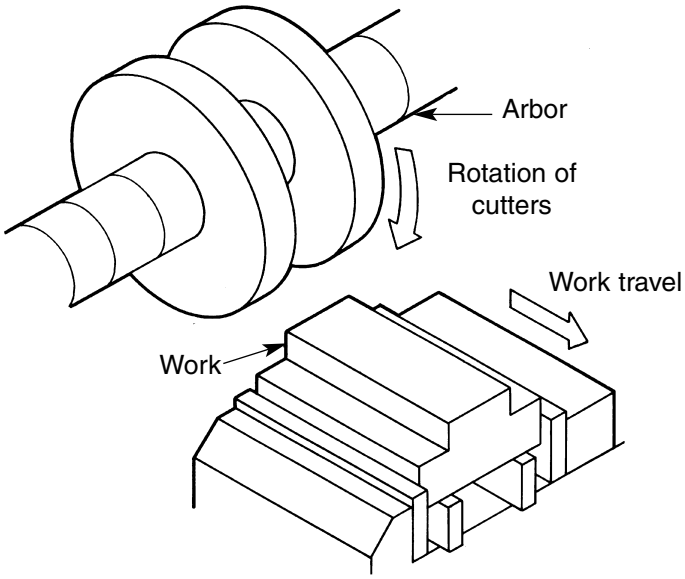

Straddle Milling on Flatwork

Types of Gears

A– Worm
B– Crossed helical
C– Spiral miter
D– Bevel and pinion
E– Gear and pinion
F– Rolled pinion
G– Spur
H– Internal gear and pinion
I– Double
J– Rack and pinion
K– Miter

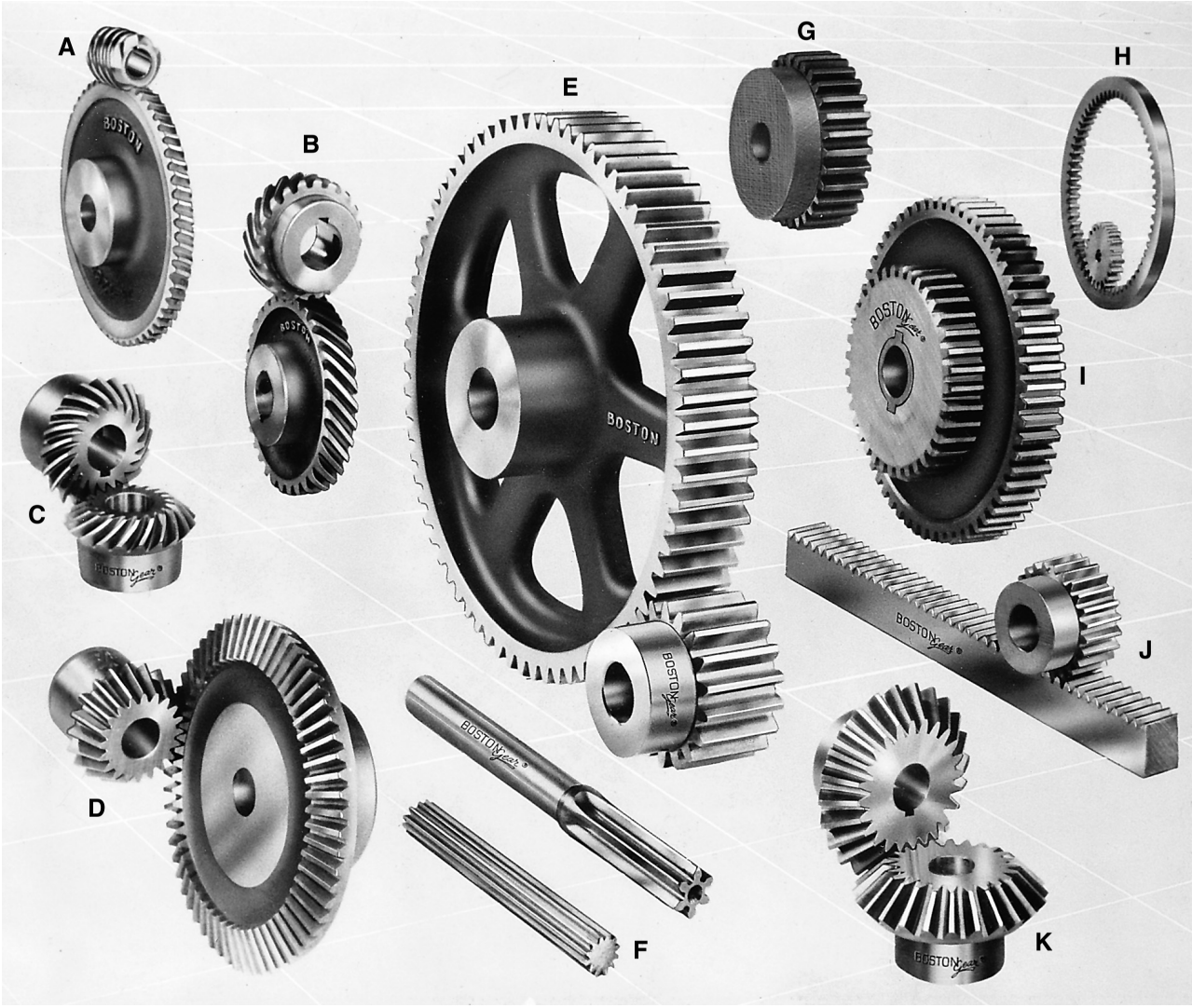

Gear Nomenclature

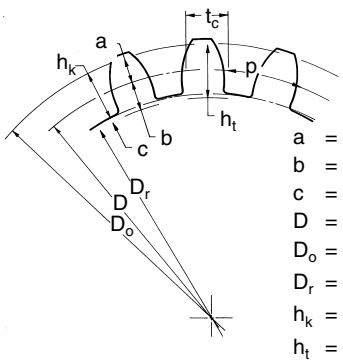

a = Addendum
b = Dedendum
c = Clearance
D = Pitch diameter
D_o = Outside diameter
D_r = Root diameter
h_k = Working depth of tooth
h_t = Whole depth of tooth
p = Circular pitch
t_c = Tooth thickness

- ***Addendum*** (a): The distance the tooth extends *above* the pitch circle.

$$a = \frac{1}{P} \text{ or } a = \frac{D}{N} \text{ or } a = \frac{D_o}{N+2}$$

- ***Circular pitch*** (p): The distance, measured on the pitch circle, between similar points on adjacent teeth.

$$p = \frac{\pi p}{P} \text{ or } p = \frac{\pi D}{N}$$

- ***Clearance*** (c): The difference between the working depth and the whole depth of a gear tooth. The amount by which the dedendum on a given gear exceeds the addendum of the mating gear.

$$c = \frac{0.157}{P}$$

- ***Dedendum*** (b): The distance the tooth extends *below* the pitch circle.

$$b = \frac{1.157}{P}$$

- ***Distance between centers of two mating gears*** (C): This distance may be calculated by adding the number of teeth of both gears and dividing one-half that sum by the diametral pitch.

$$C = \frac{N_1 + N_2}{2 \div P}$$

N_1 = Number of teeth on first gear.
N_2 = Number of teeth on second gear.

- ***Diametral pitch*** (P): The number of teeth per inch of pitch diameter.

$$P = \frac{N}{P} \text{ or } P = \frac{N+2}{D_o} \text{ or } P = \frac{\pi}{P}$$

- ***Number of teeth*** (N): The number of teeth on a gear.

$$N = DP \text{ or } N = D_oP - 2 \text{ or } N = \frac{\pi D}{p}$$

- ***Outside diameter*** (D_o): Diameter or size of the gear blank.

$$D_o = D + 2_a \text{ or } D_o = \frac{N}{P} + 2\left(\frac{1}{p}\right) \text{ or } D_o = \frac{N+2}{P}$$

- ***Pitch circle:*** An imaginary circle located approximately half the distance from the roots and tops of the gear teeth. It is tangent to the pitch circle of the mating gear.

- ***Pitch diameter*** (D): The diameter of the pitch circle.

$$D = \frac{N}{P} \text{ or } D = 0.3183pN \text{ or } D = \frac{D_oN}{N+2}$$

- ***Pressure angle*** (θ): The angle of pressure between contacting teeth of mating gears. It represents the angle at which the forces from the teeth of one gear is transmitted to the mating tooth of another gear. Pressure angles of 14 1/2°, 20°, and 25° are standard. However, the 20° is replacing the older 14 1/2°.

- ***Tooth thickness*** (t_c): Thickness of the tooth at the pitch circle. The dimension used in measuring tooth thickness with Vernier gear tooth caliper.

$$t_c = \frac{1.5708}{P}$$

- ***Whole depth of tooth*** (h_t): Total depth of a tooth space, equal to the addendum (a) plus dedendum (b), or the depth to which each tooth is cut.

$$h_t = a + b \text{ or } h_t = \frac{2.157}{P}$$

- ***Working depth of tooth*** (h_k): The sum of the addendum's of the two mating gears.

$$h_k = a_1 + a_2$$

Bevel Gear Nomenclature

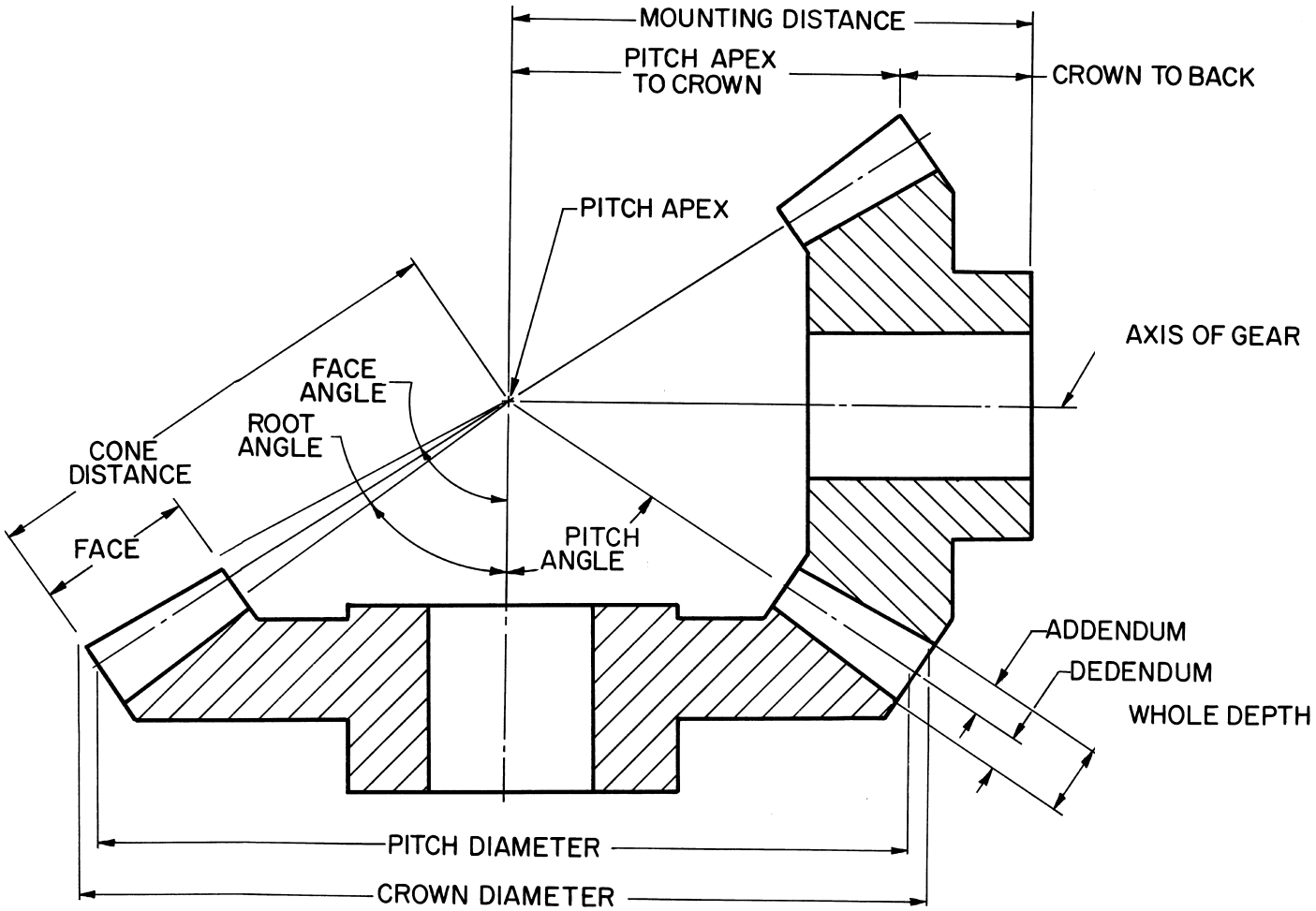

Milling Machine Operations

Name: _____ Date: _____ Score: _____

1. _____ mills and _____ mills are the cutters normally used on a vertical milling machine. 1. _____ _____

2. The _____ end mill is used when the cutter must be fed into the work like a drill. 2. _____

3. Blind holes or closed keyseats are made with a _____ end mill. 3. _____

4. Face milling cutters over 6" (150 mm) in diameter are usually of the _____ type. 4. _____

5. A _____ scale on the spindle head of a vertical milling machine assures accurate angular settings. 5. _____

6. List three methods for machining chamfers, bevels, and tapered sections on a vertical milling machine. _____

_____

_____

_____

7. An _____ or a _____ can be used to locate the first hole of a series to be drilled on a vertical milling machine. 7. _____ _____

8. The most accurate way to align a vise on milling machine is with a _____. 8. _____

9. Explain how to center an end mill on round stock for the purpose of machining a keyseat. Use the paper strip technique. _____

_____

_____

_____

_____

_____

10. Gang milling means: 10. _____
   a. several cutters being used at same time to machine a job.
   b. two or more cutters straddling the job.
   c. several side cutters being used at same time to machine a job.
   d. All of the above.
   e. None of the above.

Name: _____

11. Why should a milling cutter be keyed to the arbor? _____

_____

12. When sawing (slitting) thin stock, the _____ diameter cutter that provides adequate clearance should be used. 12. _____

13. In general, use the _____ arbor possible that permits adequate clearance between the arbor support and the work. 13. _____

14. Describe how to safely remove or mount a milling cutter on an arbor. _____

_____

_____

_____

_____

15. How would a dividing head be set up to cut a 100-tooth gear? The dividing head has a 40:1 ratio and the index plate has the following series of holes: 33, 37, 41, 45, 49, 53, 57.

_____Number of full turns.

_____Hole series used.

_____Number of holes in sector arm spacing.

16. What is a spur gear? _____

_____

_____

_____

17. How does a rack differ from a spur gear? _____

_____

_____

_____

18. List five precautions to be observed when operating a milling machine. _____

_____

_____

_____

_____

_____